Tai Sin
Busbar Trunking System

TAI SIN BUSBAR TRUNKING SYSTEM

LT LINE I - COPPER & ALUMINIUM SANDWICH BUSBAR TRUNKING SYSTEM

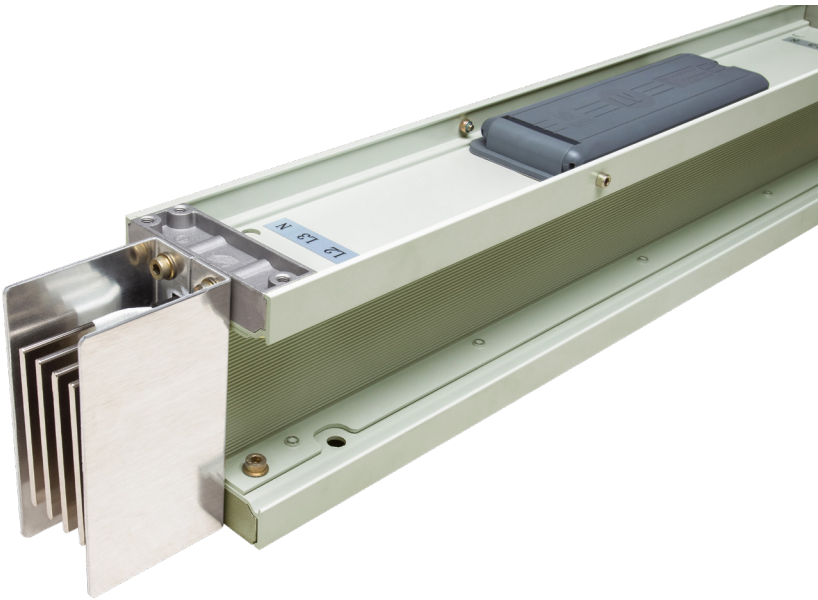

Introduction

Busbar trunking system, first introduced in 1932, solving the automation industries needs for flexible power distribution system.

Since then, Busbar trunking system had evolved from Air Insulated design to today compact series “Sandwich design” and incorporating monitoring & control system in load distribution. The versatility of busbar trunking system design not only serves high-amperage application efficiently in terms of energy loss, it also provide high productivity in the implementation on site.

Today, busbar trunking system is widely used in all segments of development:

a) Industrial

b) Residential

c) Commercial

d) Data Centre

e) Infrastructure

Recognizing the needs for Efficiency, Flexibility & Productivity, Tai Sin Electric Limited, a renowned Cable manufacturer & specialist in Low Voltage Distribution system, developed Tai Sin Low Voltage Busbar Trunking System.

Content

Company Profile

Tai Sin Electric Cables Manufacturer Pte Ltd was incorporated in 1980, and has since expanded and diversified steadily to become the Tai Sin Group of Companies. First listed on SESDAQ, the second board of the Singapore Exchange (SGX) in 1998, the Group showed exceptional growth and excellence over the years, thus enabling its promotion to the Main Board of the SGX in 2005.

Today, the Group has diversified its scope as a cable manufacturer. Its acquisitions of established distribution businesses have enabled it to combine this strong distribution heritage with its own cable and wire manufacturing capabilities, making it a regional electric solutions specialist. It now provides manufacturing, distribution and technical services to support its customers in the industrial, infrastructure, commercial and residential sectors.

Over time, the Group has built up strong business competencies. To date, it is one of only a few enterprises that produces cables and switchboards, and operates a successful regional network distributing electrical and control products, devices and accessories. With subsidiaries and offices located in Singapore, Malaysia, Vietnam, Brunei and Indonesia, the Group counts as part of its customer portfolio, many prominent building and construction projects in the region.

International Certification

Tai Sin LT Line I series busbar trunking system conforms to IEC 61439-6, Greenmark & BS6387, certified by KEMA KEUR, PSB Singapore & Singapore Green Building Council.

BCA GREEN MARK

TÜV SÜD PSB

IEC 61439-6 Certififed

KEMA KEUR

System overview

Tai Sin Low Voltage Busbar Trunking System is a reliable and efficient electrical distribution system with sandwich construction and superior performance. It is a safe and robust power distribution system with high electrical efficiency, low voltage drop, high mechanical strength.

The system offers a full line of busway to meet the world market: suitable for 3P3W, 3P4W, 3P5W, supply and distribution, with rated current from 250A to 5000A（for aluminum conductor）& 250A to 6300A (for copper conductor), rated operation voltage up to 690V(rated insulation voltage up to 1000V), IP degree up to IP66 and the frequency 50~60Hz.

Constructed with two-piece of extruded aluminum housing, Tai Sin Low Voltage Busbar Trunking System breaks the barrier of weight as one of the lightest system in the business and offers you maximum flexibility. The full aluminum alloy housing, a low magnetic material, avoids hysteresis loss on the distribution system.

Tai Sin Low Voltage Busbar Trunking System provides longer life epoxy insulation as option to polyester insulation.

Tai Sin Low Voltage Busbar Trunking System is an ideal choice for various applications including commercial, industrial electrical distribution and other verticals.

From every aspect—performance, flexibility, quality and customer value, Tai Sin Low Voltage Busbar Trunking System is a superior choice for your next installation.

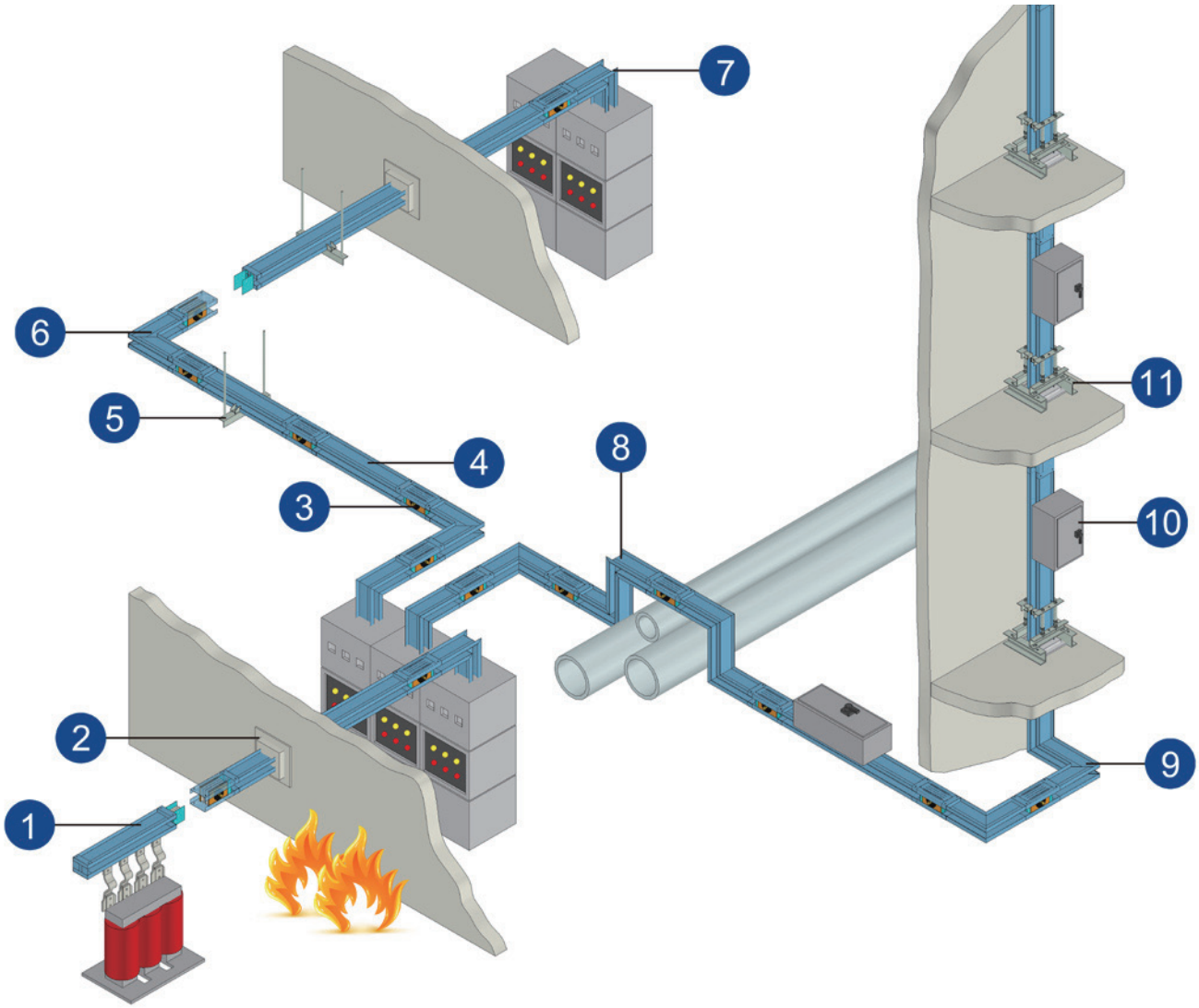

1. Transformer Connection Unit
2. Wall Flange
3. Joint
4. Straight Length
5. Hanger
6. Flatwise Elbow
7. Edgewise Elbow
8. Edgewise Offset
9. Nonstandard Elbow
10. Plug-in Box
11. Spring Hanger

Product Features
—Superior design and performance

Unique structure design

The unique “serrated surface” design of extruded aluminum housing greatly improves the heat dissipation for the whole busway system. By the design of two-piece housing, Tai Sin Low Voltage Busbar Trunking System provides more reliable IP protection for the field application than traditional design, including IP54, IP65, IP66.

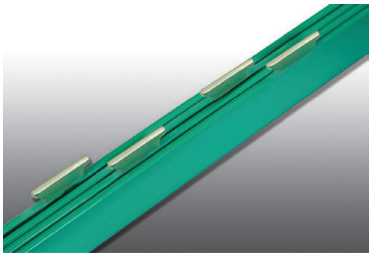

Novel conductor structure

True sandwich structure for the design and construction. Bus bars for plug in length are welded in place by state -of-the-art welding processes. Bus tabs, arranged compactly without bending and silver plated, to achieve the performance of superior heat dissipation, lower temperature rise and elimination of “chimney effect”.

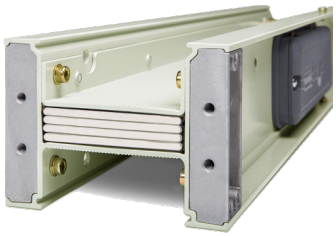

"Sandwich" Structure

The conductors are arranged densely in the housing, achieving the performance of superior heat dissipation, lower temperature rise and elimination of "chimney effect". Current-carrying capability is not affected by different installation sites or methods. This compact structure has a width of only 125mm, occupying smaller building space.

Superior & reliable insulation

Both polyester film insulation and epoxy insulation (Class B) are available with exceptional electrical performance and superior mechanical strength.

Environmental friendly materials are applied with certification by reputed international laboratory. The busway system is halogen-free with no toxicity emission in case of fire.

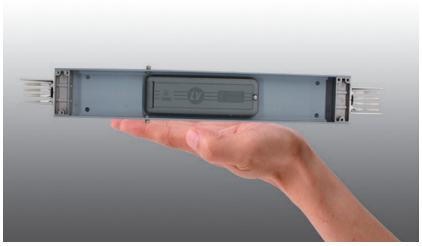

Compact design

The dimension of LV busway begins at 125mmx103mm for 400-630A ratings with very compact design. Bus plug is also compressive and dimension begins at 360mm×250mm×255 mm for 100A, giving more space for other equipments.

Conductor sawing

High-speed sawing machine offers a high sawing accuracy, make smooth cut without issues like deformed, stretched, inconsistent flat end, as a result the temperature rise at the busway joint is decreased.

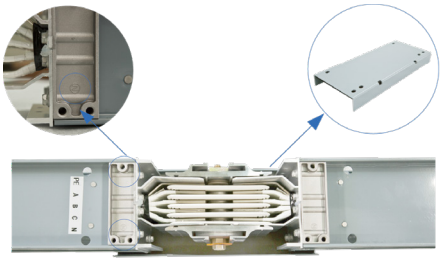

Unique error-proof device (Bridge Type Joint)

A unique error-proof device is designed to prevent potential damage on bus bar due to incorrect connection. With this unique device, the installers can not connect two sections of busway successfully with incorrect phase orientation.Bridge type joint, each joint allow ±8mm liner adjustment.

Unique joint design

- Single bolt joint design is applied to shorten the time of connection by 50% than the traditional design.
- Double headed "break off" joint bolt is applied to tighten the busway with just a common 16mm socket wrench. Belleville spring washers are adopted to ensure pressure evenly applied across the joint.

Features
—Ease of installation and safe operation

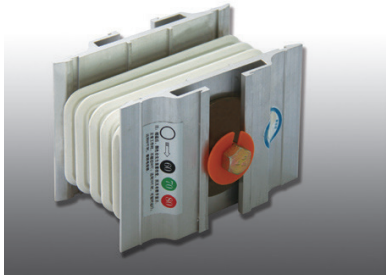

Temperature rise Indicator

● Joint insulator with a convex-concave groove edge provides an increased creepage distance.

● Color-coded-temperature indicator applied at busway joint is to give an early warning when high temperature occurs at the joint.

Plug outlet and busway plug

● Both outlet phase tabe and plug stab fingers are fully silver-plated

● The bus plug has complete safty interlock mechanism to ensure electric safty

● The plug outlet protection module is embedded with waterproof silicone rubber, up to IP54

● Up to 10 plug outlets can be installed every 3 m of straight length busway

Electrical specification

Aluminum alloy housing with internal separate ground bar (aluminum or copper) of LV Series Busway provides an extremely low impedance ground path with small resistance for both copper and aluminum systems.plug-in outlet grounding is supplied with tin-plated copper tabs bolted to the plug in box housing for superior continuity through standard bus plug ground stabs.

Grounding resistance of LV busway system (temperature=20℃):

LVC

SN	Rating	Deck	3P5W			
			Height (H)	Width (W)	PE Cross (mm^2)	Grounding Capactity (mm^2)
1	250	1	103	125	90	1635
2	400	1	103	125	90	1635
3	630	1	103	125	120	1665
4	800	1	118	125	150	1755
5	1000	1	128	125	195	1890
6	1250	1	153	125	270	2115
7	1600	1	188	125	360	2385
8	2000	1	223	125	480	2745
9	2500	1	273	125	630	3195
10	3200	2	352	125	720	4526
11	4000	2	432	125	960	5246
12	5000	2	532	125	1260	6146
13	6300	3	764	125	1500	7764

LVA

SN	Rating	Deck	3P5W			
			Height (H)	Width (W)	PE Cross (mm^2)	Grounding Capactity (mm^2)
1	250	1	103	125	120	1665
2	400	1	113	125	150	1755
3	630	1	128	125	195	1890
4	800	1	143	125	240	2025
5	1000	1	168	125	315	2250
6	1250	1	203	125	420	2565
7	1600	1	253	125	570	3015
8	2000	2	322	125	630	4256
9	2500	2	392	125	840	4886
10	3200	2	492	125	1140	5786
11	4000	2	572	125	1380	6506
12	5000	2	632	125	1560	7071

Short-circuit ratings

The ratings shown below are UL recognized rms symmetrical amps. Tests were run per UL 857 standards.

The system can comply with IEC61439 for short circuit withstand test at 1 Second.

Rated short circuit withstand current

Copper	(RMS Symmetrical, KA)
Current	1 Sec.
250A	30
400A	30
630A	30
800A	50
1000A	50
1250A	50
1600A	65
2000A	65
2500A	65
3200A	120
4000A	120
5000A	120
6300A	120

Rated short circuit withstand current

Aluminum	(RMS Symmetrical, KA)
Current	1 Sec.
250A	30
400A	30
630A	30
800A	30
1000A	50
1250A	50
1600A	65
2000A	80
2500A	80
3200A	120
4000A	120
5000A	120

Resistance, reactance, impedance and voltage drop

Copper conductor:Frequency-50Hz

Current	Resistance R_{20} (mΩ/m)	Resistance $R_{Full\ Load}$ (mΩ/m)	Resistance X (mΩ/m)	Voltage Drop per Meter at Full Load Condition (V/m)				
				Power factor cosφ				
				0.6	0.7	0.8	0.9	1
250	0.090	0.112	0.037	0.067	0.073	0.078	0.081	0.078
400	0.090	0.112	0.037	0.067	0.073	0.078	0.081	0.078
630	0.090	0.112	0.037	0.106	0.115	0.123	0.128	0.123
800	0.066	0.077	0.032	0.100	0.107	0.112	0.116	0.107
1000	0.055	0.071	0.026	0.109	0.117	0.125	0.130	0.122
1250	0.040	0.050	0.019	0.098	0.105	0.111	0.115	0.108
1600	0.029	0.034	0.015	0.090	0.096	0.101	0.104	0.095
2000	0.023	0.028	0.012	0.093	0.099	0.104	0.107	0.098
2500	0.017	0.022	0.011	0.096	0.101	0.105	0.106	0.094
3200	0.015	0.024	0.006	0.104	0.115	0.125	0.133	0.132
4000	0.011	0.015	0.003	0.077	0.086	0.094	0.101	0.104
5000	0.009	0.011	0.002	0.071	0.079	0.086	0.093	0.094
6300	0.007	0.009	0.001	0.068	0.065	0.060	0.071	0.078

Aluminium conductor:Frequency-50Hz

Current	Resistance R_{20} (mΩ/m)	Resistance $R_{Full\ Load}$ (mΩ/m)	Resistance X (mΩ/m)	Voltage Drop per Meter at Full Load Condition (V/m)				
				Power factor cosφ				
				0.6	0.7	0.8	0.9	1
250	0.150	0.195	0.032	0.062	0.069	0.076	0.082	0.085
400	0.116	0.162	0.028	0.083	0.092	0.101	0.110	0.112
630	0.093	0.120	0.052	0.124	0.132	0.139	0.143	0.131
800	0.077	0.105	0.027	0.117	0.129	0.139	0.147	0.145
1000	0.058	0.072	0.046	0.139	0.144	0.148	0.148	0.125
1250	0.044	0.061	0.012	0.099	0.110	0.120	0.129	0.131
1600	0.032	0.046	0.015	0.110	0.119	0.127	0.134	0.128
2000	0.029	0.041	0.019	0.138	0.146	0.153	0.156	0.141
2500	0.022	0.029	0.010	0.110	0.119	0.127	0.132	0.125
3200	0.016	0.023	0.007	0.106	0.116	0.124	0.131	0.127
4000	0.013	0.015	0.005	0.086	0.093	0.099	0.104	0.100
5000	0.010	0.013	0.004	0.080	0.085	0.090	0.094	0.099

Resistance, reactance, impedance and voltage drop

Copper conductor:Frequency-60Hz

Current	Resistance R_{20} (mΩ/m)	Resistance $R_{Full\ Load}$ (mΩ/m)	Resistance X (mΩ/m)	Voltage Drop per Meter at Full Load Condition (V /m)				
				Power factor cosφ				
				0.6	0.7	0.8	0.9	1
250	0.090	0.112	0.045	0.072	0.077	0.081	0.084	0.078
400	0.090	0.112	0.045	0.072	0.077	0.081	0.084	0.078
630	0.090	0.112	0.045	0.113	0.121	0.127	0.132	0.123
800	0.066	0.077	0.039	0.107	0.113	0.118	0.120	0.107
1000	0.055	0.071	0.031	0.116	0.124	0.130	0.134	0.122
1250	0.040	0.050	0.023	0.105	0.111	0.116	0.119	0.108
1600	0.029	0.034	0.018	0.097	0.102	0.106	0.107	0.095
2000	0.023	0.028	0.015	0.100	0.105	0.109	0.111	0.098
2500	0.017	0.022	0.014	0.104	0.108	0.111	0.111	0.094
3200	0.015	0.024	0.007	0.109	0.119	0.128	0.136	0.132
4000	0.010	0.013	0.007	0.093	0.097	0.100	0.101	0.088
5000	0.008	0.010	0.004	0.081	0.086	0.091	0.094	0.087
6300	0.007	0.009	0.003	0.074	0.081	0.086	0.090	0.088

Aluminium conductor:Frequency-60Hz

Current	Resistance R_{20} (mΩ/m)	Resistance $R_{Full\ Load}$ (mΩ/m)	Resistance X (mΩ/m)	Voltage Drop per Meter at Full Load Condition (V /m)				
				Power factor cosφ				
				0.6	0.7	0.8	0.9	1
250	0.150	0.195	0.038	0.064	0.071	0.078	0.083	0.085
400	0.116	0.162	0.034	0.086	0.095	0.104	0.111	0.112
630	0.093	0.120	0.062	0.133	0.140	0.146	0.148	0.131
800	0.077	0.105	0.033	0.124	0.134	0.144	0.151	0.145
1000	0.058	0.072	0.055	0.151	0.155	0.157	0.155	0.125
1250	0.044	0.061	0.014	0.103	0.113	0.123	0.131	0.131
1600	0.032	0.046	0.018	0.117	0.125	0.132	0.137	0.128
2000	0.029	0.041	0.023	0.149	0.156	0.161	0.162	0.141
2500	0.022	0.029	0.012	0.117	0.125	0.132	0.136	0.125
3200	0.016	0.023	0.008	0.112	0.121	0.129	0.134	0.127
4000	0.013	0.015	0.006	0.091	0.097	0.103	0.107	0.100
5000	0.010	0.013	0.005	0.005	0.090	0.092	0.097	0.115

Physical data

Straight length

Feeder, the straight length without outlets, can be installed either horizontally or vertically.

The standard length is either 3000mm or 4000mm.

The minimum length is 460mm.

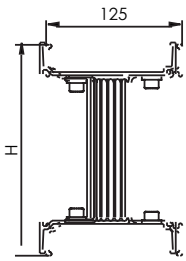

Single-deck

LVA-02 ~ 16

LVC-04 ~ 25

01

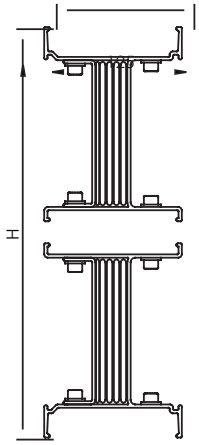

Dual-deck

LVA-20~40

LVC-32~50

02

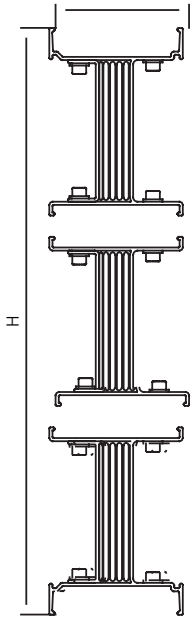

Tripple-deck

LVC-63

03

Copper conductor

Current	Dimension		Weight per meter (kg/m)	Fig.
	Width (W)	Height (H)	5wire 100%N, 50%PE	
400	125	99	12.4	01
630	125	109	13.6	
800	125	124	17.1	
1000	125	139	19.9	
1250	125	164	25.4	
1600	125	204	34.3	
2000	125	244	42.8	
2500	125	323	59.4	
3200	125	393	66.5	
4000	125	483	86.3	02
5000	125	583	108.9	
6300	125	264	155.5	03

Aluminium conductor

Current	Dimension		Weight per meter (kg/m)	Fig.
	Width (W)	Height (H)	5wire 100%N, 50%PE	
400	125	113	7.9	01
630	125	128	9.3	
800	125	143	10.4	
1000	125	168	12.7	
1250	125	203	15.7	
1600	125	253	19.8	
2000	125	322	24.3	
2500	125	392	31	02
3200	125	492	39.4	
4000	125	572	48.9	
5000	125	632	57.2	

Fittings

Plug-in straight length

The plug-in busway has a flexible design with optional plug outlets on both sides. A maximum of 5 outlets can be fixed on each side of 3m standard length. The customer may reserve plug outlets for extension in the future when changes occur in terms of the equipment load or busway run. Both base plate and socket cover are set for each plug outlet. Base plate helps to prevent fingers from contacting live conductors (IP2X) by accident, on which the phase sequences of conductors are identified. Socket cover prevents the conductive contacting surface from being contaminated. A pad may be used to keep off dust or moisture.

Standard length is 3000mm or 4000mm. The minimum length is 720mm. The minimum length of L1 (distance from the center of plug outlet to standard end) is 360mm. The minimum length of L2 (distance between the centers of two adjacent plug outlets) is 570mm.

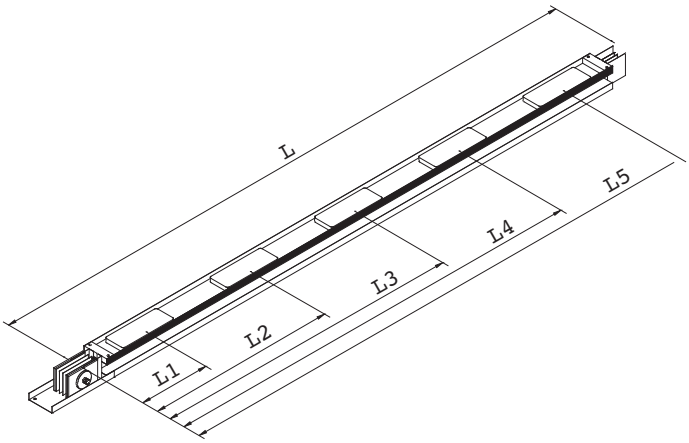

L1=0.36

L2=0.93

L3=1.50

L4=2.07

L5=2.64

Standard length:

LVC: L=1、2、3m LVA: L=1、2、3m

Optional length:

LVC: L=0.72 ～ 4m LVA: L=0.72 ～ 4m

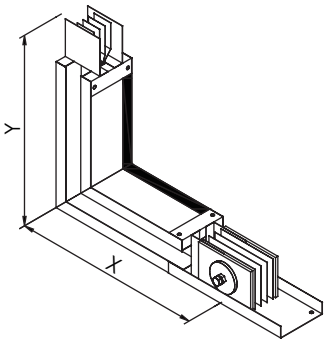

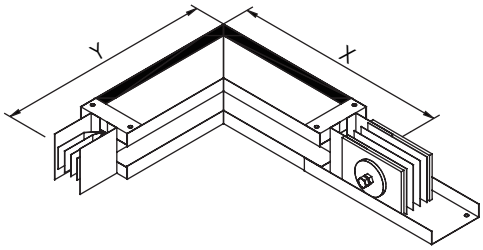

L flatwise elbow

Rated current (A)	Copper busway size (mm)				Aluminium busway size (mm)			
	Minimum		Standard		Minimum		Standard	
	X	Y	X	Y	X	Y	X	Y
250	341	341	400	400	341	341	450	450
400	341	341	400	400	351	351	450	450
630	341	341	400	400	366	366	450	450
800	351	351	400	400	381	381	450	450
1000	366	366	400	400	406	406	450	450
1250	391	391	400	400	441	441	500	500
1600	421	421	550	550	491	491	500	500
2000	461	461	550	550	560	560	850	850
2500	511	511	550	550	630	630	850	850
3200	590	590	800	800	730	730	850	850
4000	670	670	800	800	810	810	850	850
5000	770	770	800	800	870	870	900	900
6300	1002	1002	1050	1050				

L edgewise elbow

Rated current (A)	Copper busway size (mm)				Aluminium busway size (mm)			
	Minimum		Standard		Minimum		Standard	
	X	Y	X	Y	X	Y	X	Y
250	363	363	400	400	363	363	400	400
400	363	363	400	400	363	363	400	400
630	363	363	400	400	363	363	400	400
800	363	363	400	400	363	363	400	400
1000	363	363	400	400	363	363	400	400
1250	363	363	400	400	363	363	400	400
1600	363	363	400	400	363	363	400	400
2000	363	363	400	400	363	363	400	400
2500	363	363	400	400	363	363	400	400
3200	363	363	400	400	363	363	400	400
4000	363	363	400	400	363	363	400	400
5000	363	363	400	400	363	363	400	400
6300	363	363	400	400				

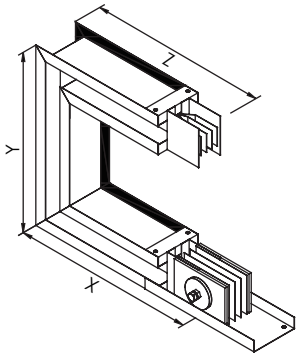

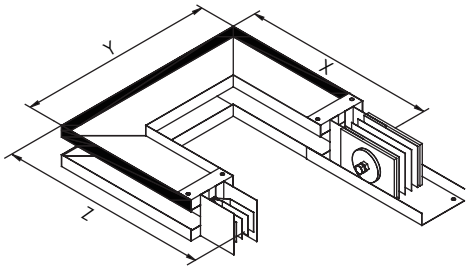

Flatwise U

Rated current (A)	Copper busway size (mm)						Aluminium busway size (mm)					
	Minimum			Standard			Minimum			Standard		
	X	Y	Z	X	Y	Z	X	Y	Z	X	Y	Z
250	341	326	341	400	450	400	341	326	341	450	500	450
400	341	326	341	400	450	400	351	346	351	450	500	450
630	341	326	341	400	450	400	366	376	366	450	500	450
800	351	346	351	400	450	400	381	406	381	450	500	450
1000	366	376	366	400	450	400	406	456	406	450	500	450
1250	391	426	391	400	450	400	441	526	441	500	650	500
1600	421	486	421	550	700	550	491	626	491	500	650	500
2000	461	566	461	550	700	550	560	764	560	850	650	850
2500	511	666	511	550	700	550	630	904	630	850	1300	850
3200	590	824	590	800	1200	800	730	1104	730	850	1300	850
4000	670	984	670	800	1200	800	810	1264	810	850	1300	850
5000	770	1184	770	800	1200	800	870	1384	870	900	1400	870
6300	1002	1648	1002	1050	1700	1050						

Edgewise U

Rated current (A)	Copper busway size (mm)						Aluminium busway size (mm)					
	Minimum			Standard			Minimum			Standard		
	X	Y	Z	X	Y	Z	X	Y	Z	X	Y	Z
250	363	370	363	400	400	400	363	370	363	400	400	400
400	363	370	363	400	400	400	363	370	363	400	400	400
630	363	370	363	400	400	400	363	370	363	400	400	400
800	363	370	363	400	400	400	363	370	363	400	400	400
1000	363	370	363	400	400	400	363	370	363	400	400	400
1250	363	370	363	400	400	400	363	370	363	400	400	400
1600	363	370	363	400	400	400	363	370	363	400	400	400
2000	363	370	363	400	400	400	363	370	363	400	400	400
2500	363	370	363	400	400	400	363	370	363	400	400	400
3200	363	370	363	400	400	400	363	370	363	400	400	400
4000	363	370	363	400	400	400	363	370	363	400	400	400
5000	363	370	363	400	400	400	363	370	363	400	400	400
6300	363	370	363	400	400	400						

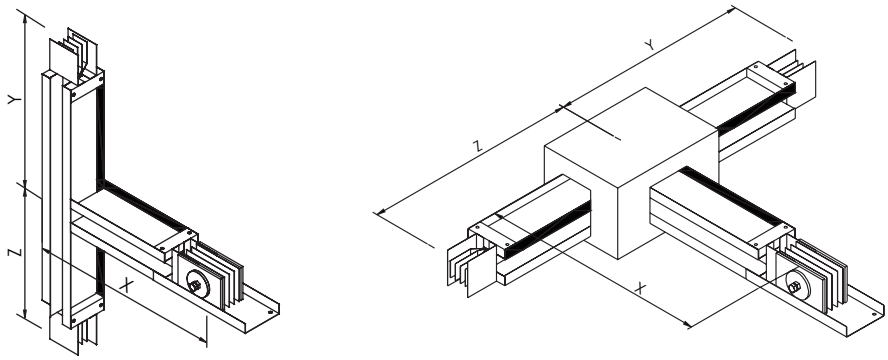

Flatwise Tee

Rated current (A)	Copper busway size (mm)						Aluminium busway size (mm)					
	Minimum			Standard			Minimum			Standard		
	X	Y	Z	X	Y	Z	X	Y	Z	X	Y	Z
250	341	290	290	400	350	350	341	290	290	450	350	350
400	341	290	290	400	350	350	351	295	295	450	350	350
630	341	290	290	400	350	350	366	302	302	450	350	350
800	351	295	295	400	350	350	381	310	310	450	350	350
1000	366	302	302	400	350	350	406	322	322	450	350	350
1250	391	315	315	400	350	350	441	340	340	500	400	400
1600	421	330	330	550	400	400	491	365	365	500	400	400
2000	461	350	350	550	400	400	560	399	399	850	550	550
2500	511	375	375	550	400	400	630	434	434	850	550	550
3200	590	414	414	800	550	550	730	484	484	850	550	550
4000	670	454	454	800	550	550	810	524	524	850	550	550
5000	770	504	504	800	550	550	870	554	554	900	600	600
6300	1002	620	620	1050	650	650						

Edgewise Tee

Rated current (A)	Copper busway size (mm)						Aluminium busway size (mm)					
	Minimum			Standard			Minimum			Standard		
	X	Y	Z	X	Y	Z	X	Y	Z	X	Y	Z
250	363	411	411	400	500	500	363	411	411	400	500	500
400	363	411	411	400	500	500	363	411	411	400	500	500
630	363	411	411	400	500	500	363	426	426	400	500	500
800	363	426	426	400	500	500	363	436	436	400	500	500
1000	363	436	436	400	500	500	363	461	461	400	500	500
1250	363	461	461	400	500	500	363	496	496	400	600	600
1600	363	496	496	400	600	600	363	531	531	400	600	600
2000	363	531	531	400	600	600	363	581	581	400	600	600
2500	363	581	581	400	600	600	363	660	660	400	900	900
3200	363	660	660	400	900	900	363	740	740	400	900	900
4000	363	740	740	400	900	900	363	840	840	400	900	900
5000	363	840	840	400	900	900	363	900	900	400	400	900
6300	363	1072	1072	400	1100	1100						

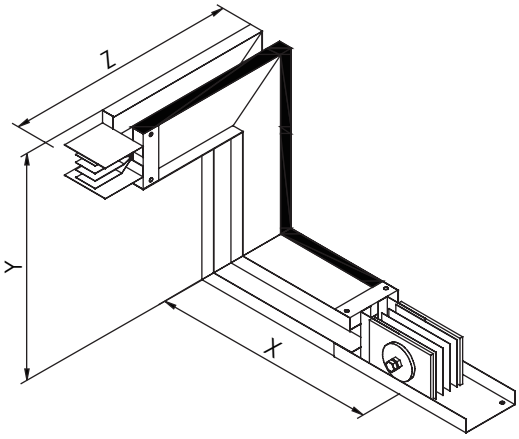

Combination Elbow

Rated current (A)	Copper busway size (mm)						Aluminium busway size (mm)					
	Minimum			Standard			Minimum			Standard		
	X	Y	Z	X	Y	Z	X	Y	Z	X	Y	Z
250	341	348	363	400	400	400	341	348	363	450	450	400
400	341	348	363	400	400	400	351	358	363	450	450	400
630	341	348	363	400	400	400	366	373	363	450	450	400
800	351	358	363	400	400	400	381	388	363	450	450	400
1000	366	373	363	400	400	400	406	413	363	450	450	400
1250	391	398	363	400	400	400	441	448	363	500	500	400
1600	421	428	363	550	550	400	491	498	363	500	500	400
2000	461	468	363	550	550	400	560	567	363	850	850	400
2500	511	518	363	550	550	400	630	637	363	850	850	400
3200	590	597	363	800	800	400	730	737	363	850	850	400
4000	670	677	363	800	800	400	810	817	363	850	850	400
5000	770	777	363	800	800	400	870	877	363	900	900	400
6300	1002	1009	363	1050	1050	400						

Flanged end

Standard length: L=0.56m

Nonstandard length: L=0.56 ～ 2.00m

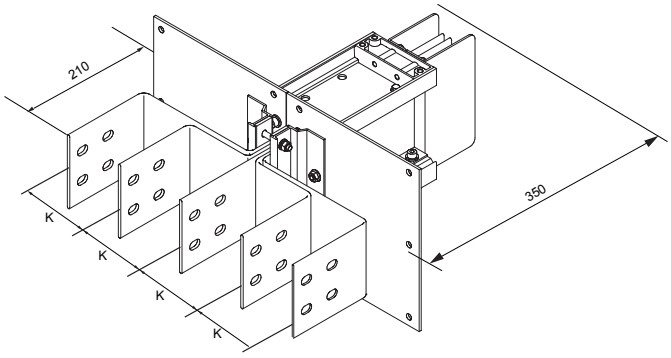

3P+100%N+50% internal bar as PE

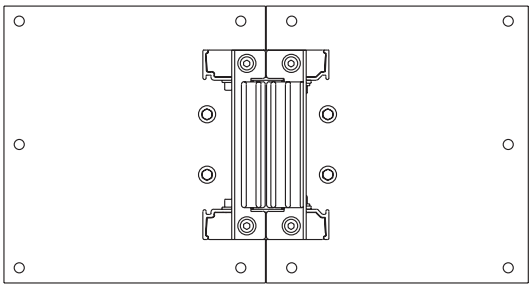

Top view

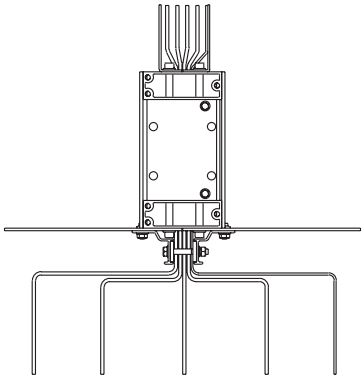

Section view

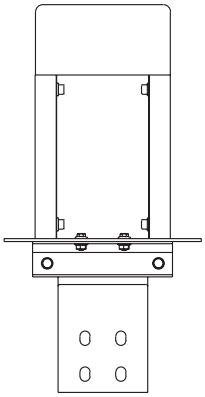

Section view

Flanged end and end tap box can be used in connection with any type of switchgear cabinets and transformers. Flanged end busbar spacing can be customized on specific application.

Note:

All the dimensions provided are for standard products. Please contact our engineers for customized dimensions.

Flanged end cut out and drilling pattern

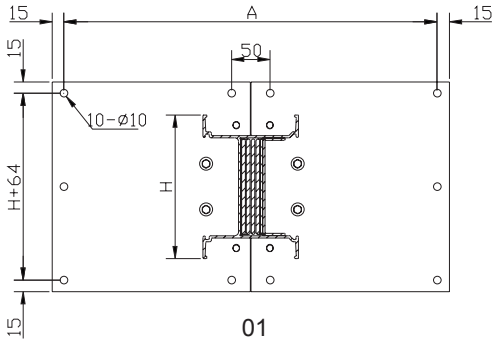

01

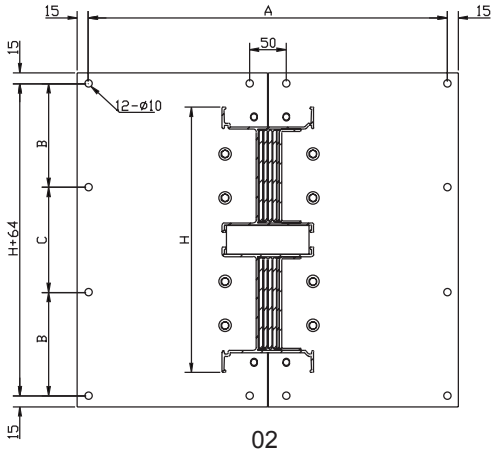

02

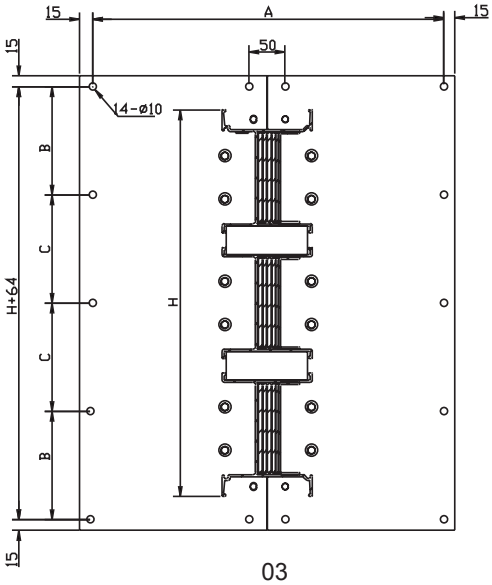

03

LVC

Rated Current (A)	3L+N+PE Size (mm)				Fig
	H	A	B	C	
250	103	490			
400	103	490			
630	103	490			
800	118	490			
1000	128	490			
1250	153	490			01
1600	188	490			
2000	223	490			
2500	273	490			
3200	352	490	140	136	
4000	432	490	165	166	02
5000	532	490	200	196	
6300	764	490	207	207	03

LVA

Rated Current (A)	3L+N+PE Size (mm)				Fig
	H	A	B	C	
250	103	490			
400	113	490			
630	128	490			
800	143	490			
1000	168	490			01
1250	203	490			
1600	253	490			
2000	322	490	130	126	
2500	392	490	150	156	
3200	492	490	185	186	
4000	572	490	210	216	02
5000	632	440	232	232	

Flanged end bar hole pattern

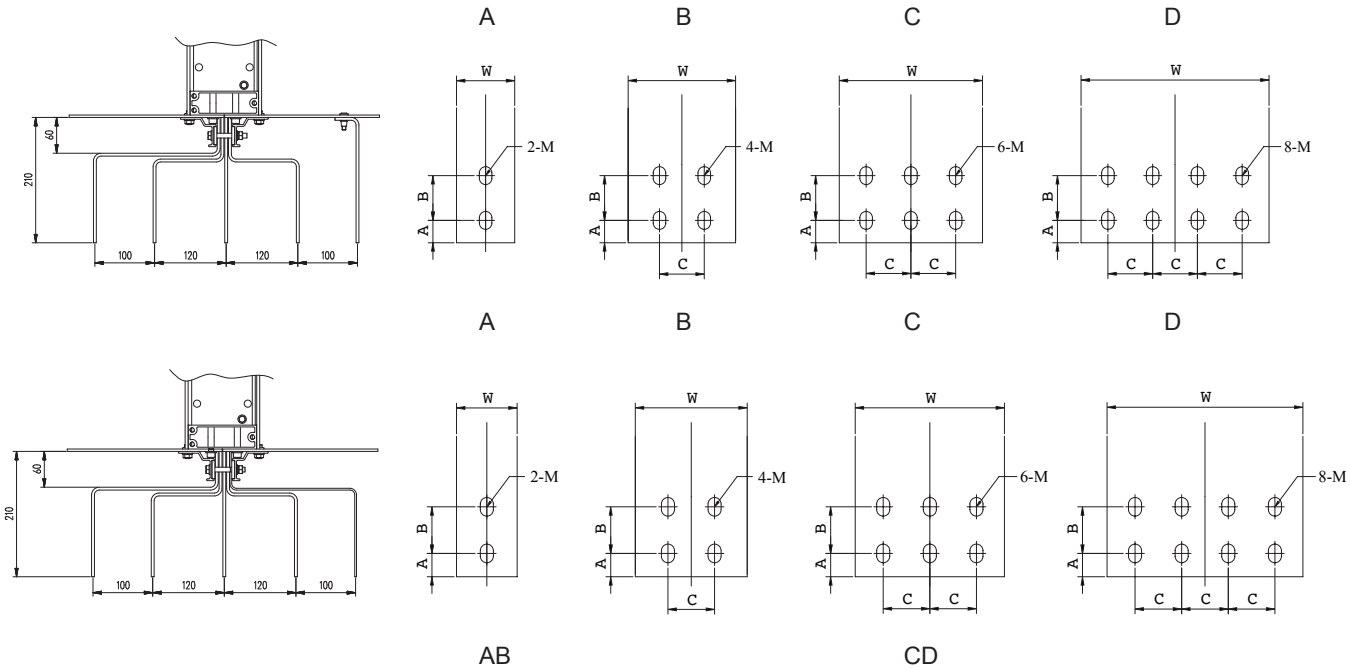

Copper conductor

Rated Current	A	B	C	M	Type
250	25	50		Φ12	A
400	25	50		Φ12	A
630	25	50		Φ14×20	A
800	25	50		Φ14×20	A
1000	25	50		Φ14×20	A
1250	25	50	50	Φ14×20	B
1600	25	50	50	Φ14×20	B
2000	25	50	50	Φ14×20	C
2500	25	50	50	Φ14×20	D
3200	25	50	50	Φ14×20	B
4000	25	50	50	Φ14×20	C
5000	25	50	50	Φ14×20	D
6300	25	50	50	Φ14×20	D

Aluminum conductor

Rated Current	A	B	C	M	Type
250	25	50		Φ14×20	A
400	25	50		Φ14×20	A
630	25	50		Φ14×20	A
800	25	50		Φ14×20	A
1000	25	50	50	Φ14×20	B
1250	25	50	50	Φ14×20	C
1600	25	50	50	Φ14×20	C
2000	25	50	50	Φ14×20	D
2500	25	50	50	Φ14×20	C
3200	25	50	50	Φ14×20	C
4000	25	50	50	Φ14×20	D
5000	25	50	50	Φ14×20	D

Expansion joint

Expansion length is the transition section compensating for thermal expansion, it is normally set each 60m in linear distance.

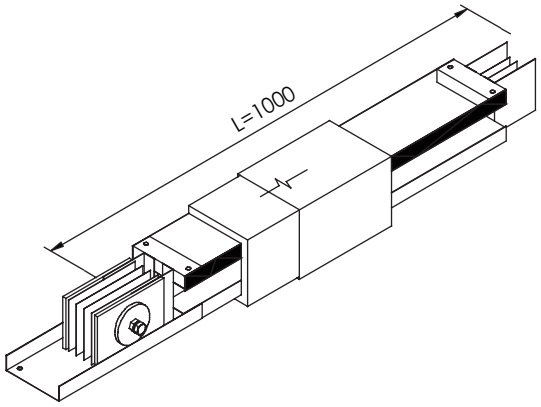

Reducer

This reducer section is used for reducing busbar size to the final load, it provides users with more economic power transmission and distribution method.

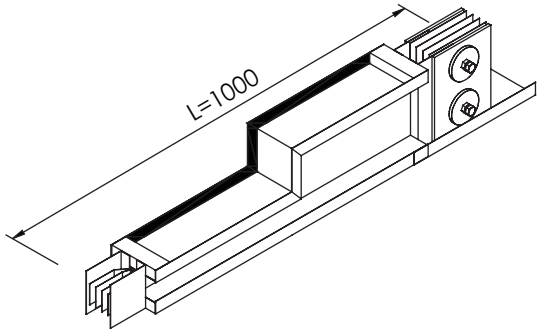

Transposition joint

Transposition section is the transition parts used for changing phase sequence of the busbar; its minimum size is 1500mm. The phase sequence of both sides has to be provided by the customer.

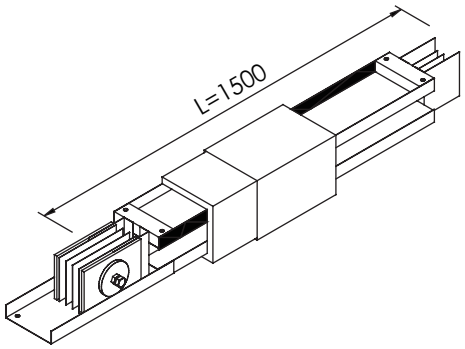

Terminal cover

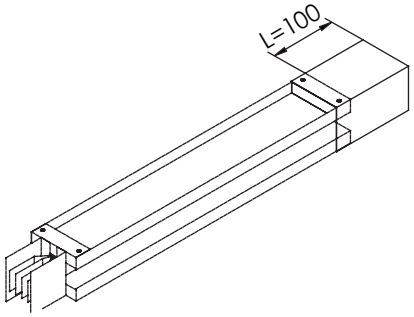

Bus plug

LV bus plug is adopted to apply electrical power directly to the load from the busway system. Fully considering customer's requirements, LV bus plug offers the options of circuit breaker or fuse.

Bus plug with circuit breaker

• Circuit breaker protection can be available with a current range from 16A-1000A.

• Load protection in the plug can be 3-Pole or 4-Pole circuit breakers, including accessories of breakers such as rotary handles, shunt release, thermal magnetic release and leakage-current protection module.

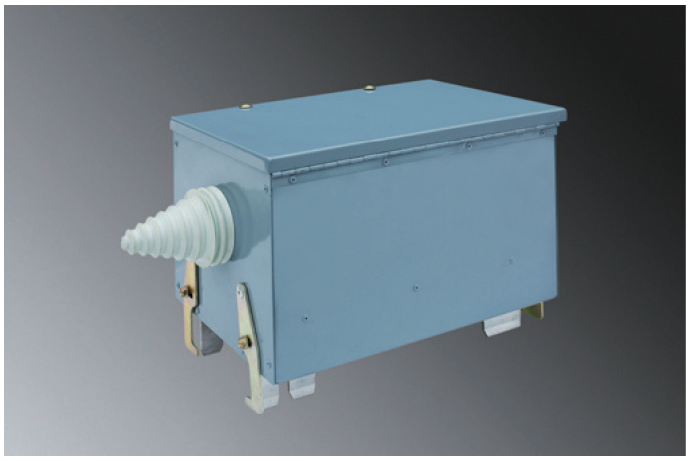

Plug with fuse

• Plug-boxes with fuses can be produced according to customer specifications.

• Unique fail-safe base pins

the plug is equipped with a positioning device that prevents incorrect phase installations.

plug Pins: All pins are silver-plated to improve the electrical conductivity.

Protection class up to IP54 with IEC 60529

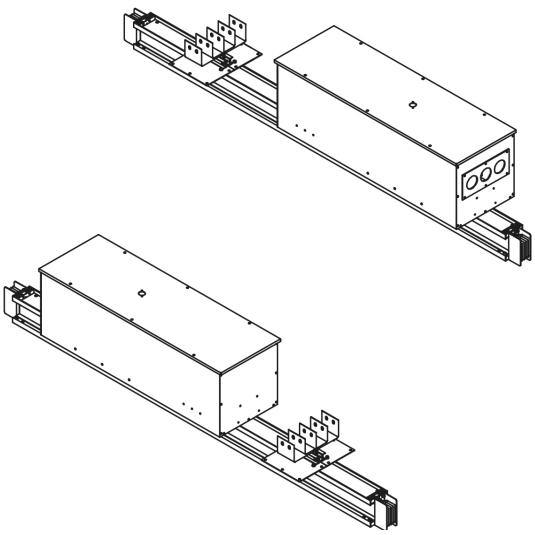

Plug-in box Dimensions (L×W×H)mm

• For non-standard dimension, please contact the manufacturer.

Current ratings (A)	Plug-in box Dimensions		
	L(mm) Length	W(mm) Width	H(mm) Height
100	360	250	255
160	400	250	255
250	520	270	275
400	650	310	315
630	800	340	345
800-1000	1200	420	355

Note:

Table 25-1 size is based on the size of common circuit breaker 3p/4p.

End tap box

Tai Sin LV series busway system tap boxes are used where a run of busway is fed by cable. we offer standard size end tap box (1m×1m×1m) while we also supply with nonstandard box according to the on-site measurement.

Flanged end with end tap box connection

The flange plate can be manufactured according to the size of the end tap box, it can be connected directly with end tap box.

Installation

LV busway protection class can be up to IP66 according to different applications.

Notes:

IP40---"4" indicates that solid objects greater than 1mm in diameter will not penetrate the housing."0" denotes no protection.

IP42---"4" indicates that solid objects greater than 1mm in diameter will not penetrate the housing."2" denotes prevention of water dripping inside by an angle of up to 15°.

IP54---"5" for dust, "4"indicates splashes of water.

IP65---"6" for dust density, "5" indicates protection from water spray.

IP66---"6" for dust density, "6" for protection of stronger water spray

Minimum clearance required for installation

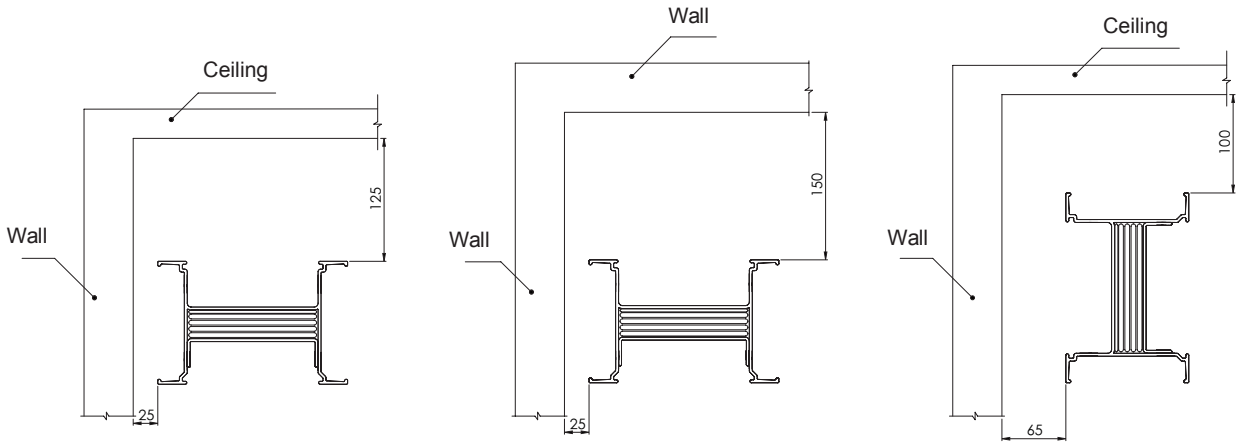

Minimum clearance required for plug-in box installation

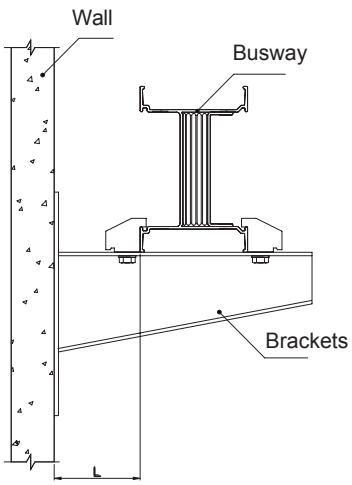

Current level for plug-in box	L(mm)
100	150
160	175
250	195
400	210
630	230
800	260
1000	300

Horizontal wall-through installation

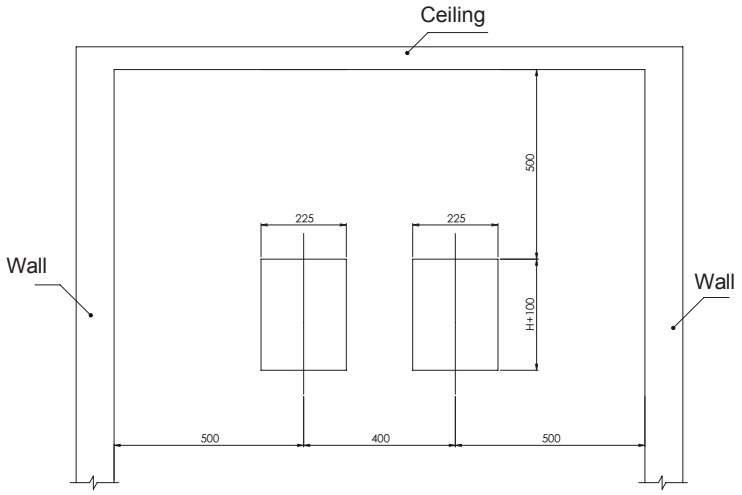

Horizontal installation-trapeze hangers Overhead Support

Holes should be first drilled in the floor so as to inlay steel expansion bolts (holes may also be drilled on site for flexible installation) or pre-bury steel U-channel for welding with hangers. The distance between two adjacent hangers shall not exceed 2m. Please specify any special requirements when placing your order.

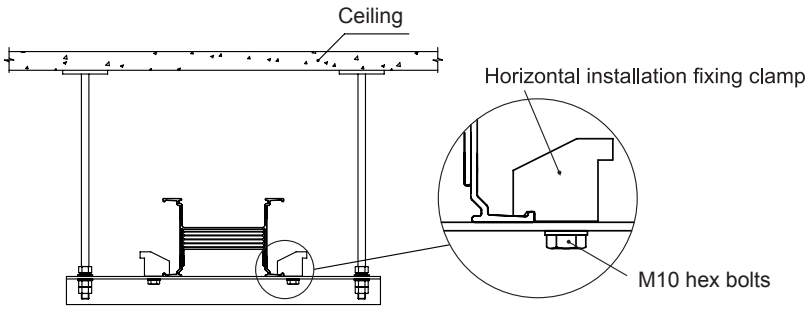

Flatwise installation

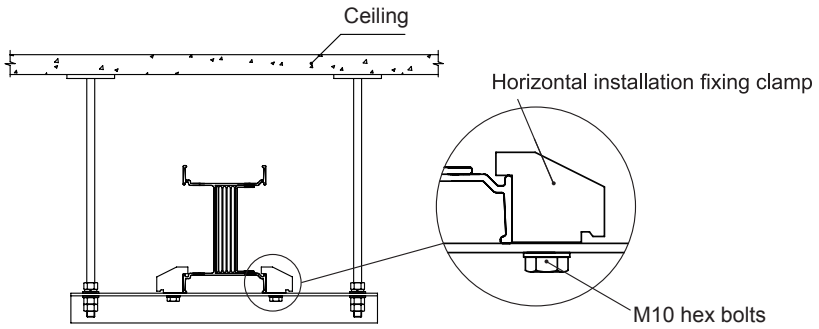

Edgewise installation

Horizontal installation-wall support

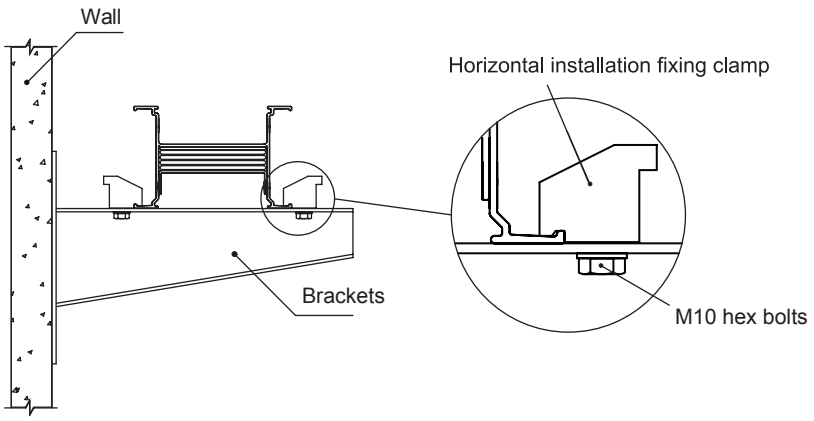

Flatwise installation

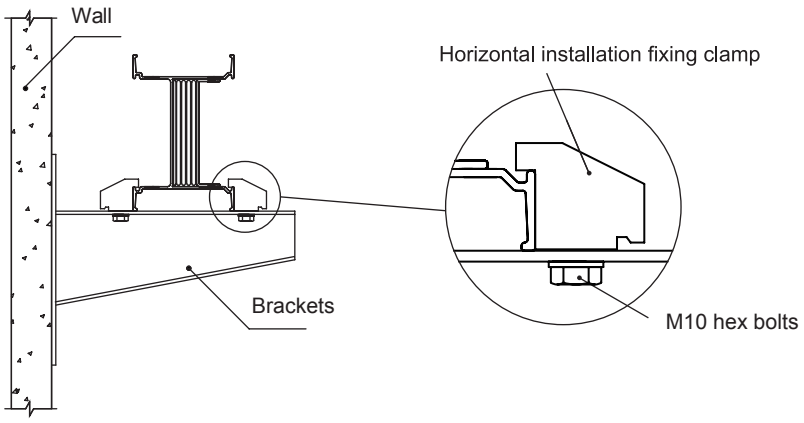

Edgewise installation

Vertical installation

When installing a vertical bus run, please refer to the figure for the dimension of the access holes. Please ensure that the spacing between every two runs of busway exceeds 350mm, especially if there are two or more vertical runs of busway installed in the same riser. Please refer to the figure below:

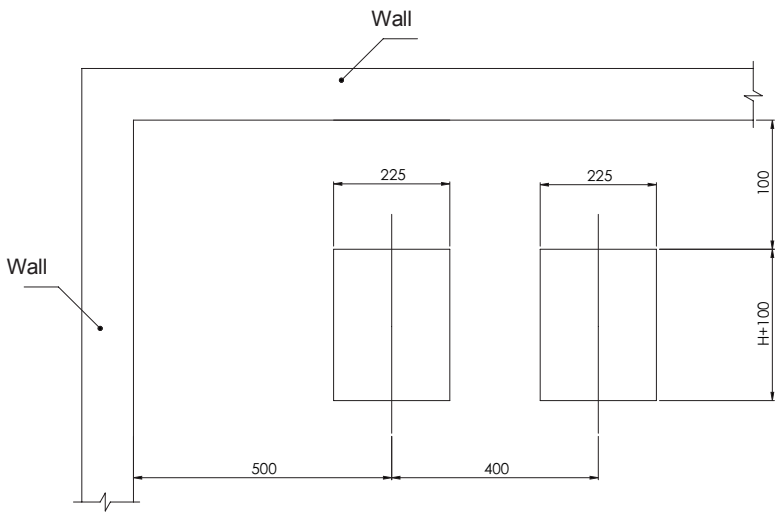

Installation for Vertical Spring Hanger

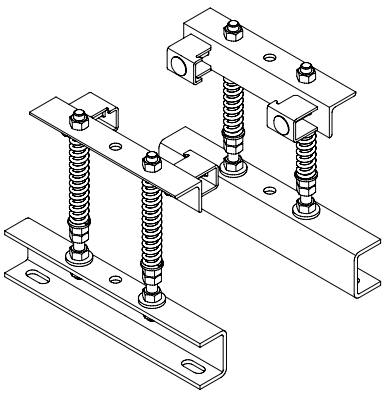

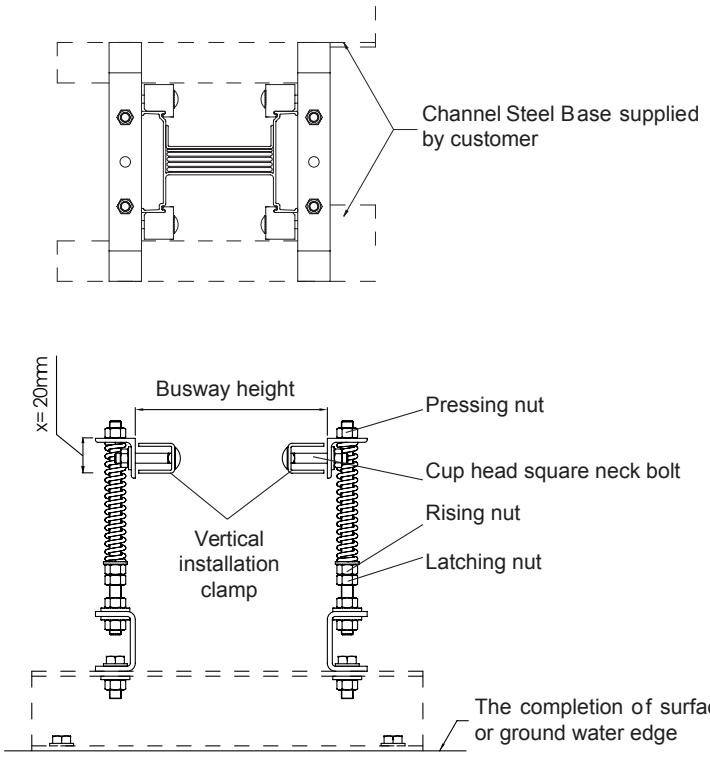

Installation Schematic Diagram

Installation for Vertical Fixed Hanger

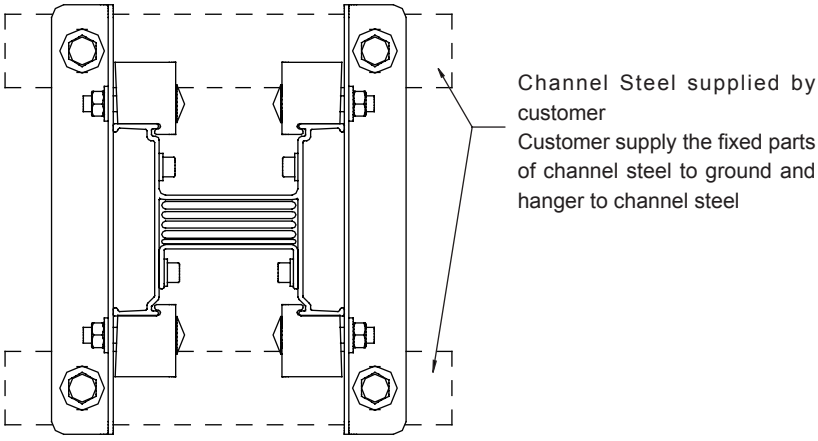

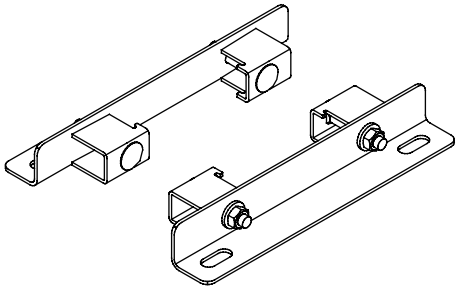

Vertical Fixed Hanger

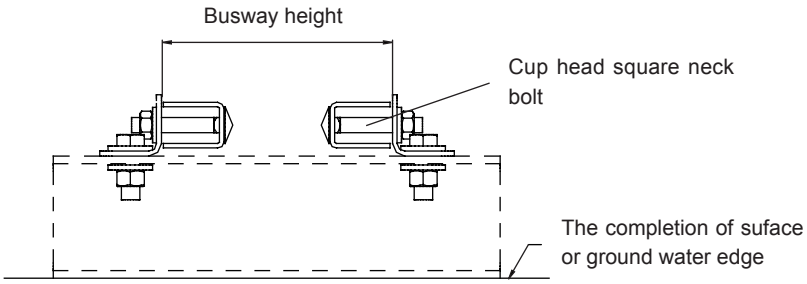

Installation Schematic Diagram

Ordering Information

Busbar trunking system purchase guide

Quotation Inquiry Form

- Model, rated current, rated voltage
- Plug-in busway or in feeder busway
- Characteristics of the power supply and protection degree
- Surface treatment and color and accessories
- Name, model, specifications, quantity of components and protection degree of the plug

Items	Details
Conductor Type	□copper conductor □aluminium conductor
Rated Capacity	□250A □400A □500A □630A □800A □1000A □1250A □1350A □1600A □2000A □2500A □3200A □3800A □4000A □4500A □5000A □6300A
Phase and Wire	□3P4W L1, L2, L3, N100% □3P5W L1, L2, L3, N100%, housing as PE □3P5W L1, L2, L3, N100%PE50%
Phase Sequence	□option 1 □option 2 □option 3 □option 4 □option 5 □option 6 □option 7 □option 8 □others
Frequency	□50Hz □60Hz
Voltage	□400V □690V
Protection Class	□IP40 □IP42 □IP54 □IP65 □IP66 □others
Colour	□light grey □light yellow □others
Product Type	□Plug-in straight length_____ M □Feeder straight length_____M
No. of Outlet	□1 □2 □3 □4 □5 □One side □Both side
Attachment	□L edgewise elbow (N-phase inward)_____ piece □ L edgewise elbow (N-phase outward)_____ piece
	□L edgewise elbow (N-phase upside)_____ piece □L edgewise elbow (N-phase underside)_____ piece
	□T edgewise elbow (N-phase inward)_____ piece □Tedgewise elbow (N-phase outward)_____ piece
	□T edgewise elbow (N-phase upside)_____ piece □T edgewise elbow (N-phase underside) _____ piece
	□terminal_____ piece □terminal busway _____ piece
	□transposition busway_____ piece □expansion busway_____ piece □phase conversion busway_____ piece
Plug-in box	□Isolating switch + fuze □MCCB □Rotary handle operation □Rotating crank operation
	Rated current: ___A___ pce ___A___ pce ___A___ pce ___A___ pce ___A___ pce ___A___ pce
	Rated current: ___A___ pce ___A___ pce ___A___ pce ___A___ pce ___A___ pce ___A___ pce
	Short Circuit Current:
Support	□horizontal_____ pce □vertical_____ pce
Delivery date	
Transportation	
Destination Address	
Contact	
Special Requirements	

LV Busway System Numbering

Rated current		
AL	Cu	code
250	-	02
400	400	04
630	630	06
800	800	08
1000	1000	10
1250	1250	12
1600	1600	16
2000	2000	20
2500	2500	25
3200	3200	32
4000	4000	40
-	5000	50
-	6300	63

Conductor Material	
AL	A
Cu	C

Code	Conductor Structure
41	L1+L2+L3+N
51	L1+L2+L3+N+PE(enclosure)
52	L1+L2+L3+N+PE

Protection Class	
42	IP42
54	IP54
65	IP65
66	IP66

Physical Data	
Type	Dimension

Fire Screen
For Positioning of fire screen, please refer to the engineering design.

LV . .. . - ... +LV .. -F120-x(y)

Type (1) Type suffix (2)

For example; LVC045265-3 means:

Straight length with LV type busway, rated current of 400A, three phase five wire (with PE), IP65 and length of 3000mm.

Model: LV, current rating 400A, 5-wire system(with a separate PE), protection rating: IP65, length=3m

Code	Protection Class
42	IP42
54	IP54

Code	Busway system
41	LV...41
51	LV...42
52	LV...52

Code	Box specifications
1	1#
2	2#
3	3#
4	4#
5	5#
6	6#

Code	Rating of circuit breaker
63S	63A
80S	80A
100S	100A
125S	125A
160S	160A
200S	200A
250S	250A
320S	320A
400S	400A
630S	630A
800S	800A

Code	Poles of circuit breaker
3P	3 poles
4P	4 poles

Code	Type of operation
-	Without operating mechanism
R	Rotary operating handle
M	Motor operating mechanism

LV- . T .. .. / ...- .. - .

For example:

LV-3T5254/200S-3P-R means the plug-in box with specification of 3#, busway system of 52, protection rating of IP54, 3P breaker protection and rotary operating handle, rated current 200A.

Catalogue serial number: TSWTLV2019-01

Authorized Distributor:

LKH Projects Distribution Pte Ltd
Address: Lim Kim Hai Building, 53 Kallang Place, 4th Storey Singapore 339177
Tel: +65 6897 7078 Fax: +65 6897 7079
E-mail: lkhpd@limkimhai.com.sg
Website: www.lkhpd.com.sg